Front-end Readout ASIC Design for Ultra-fast Sensors used in Muon Detectors

Annual meeting of DDAp and HIRSAP 2022

Alexander Elsenhans

Directors: Prof. Dr. Ivan Peric (KIT) and Dr. Manuel Platino (UNSAM)

Outline

- ANDES
- Scintillator+SiPM Based Muon Detection
- Improving Detectors with Digital SiPMs
- Conclusion

ANDES

ANDES Underground Laboratory

- ANDES laboratory (andeslab.org) will be 1750 m deep underground
  - part of the Agua Negra International Tunnel between Argentina and Chile
  - effective shield against cosmic radiation
  - low cosmic background necessary for e.g. dark matter or neutrino experiments
- Very low muon flux but non-zero (roughly 1 $m^{-2}day^{-1}$)
- Necessary to measure these muons for muon-veto

X. Bertou, "The ANDES Deep Underground Laboratory," *Sci. Rev. - End World*, vol. 1, no. 4, Art. no. 4, Sep. 2020, doi: 10.52712/sciencereviews.v1i4.24.

Scintillator+SiPM Based Muon Detection

SiPM-based Muon Detectors

- Muon Detection in *AMIGA*

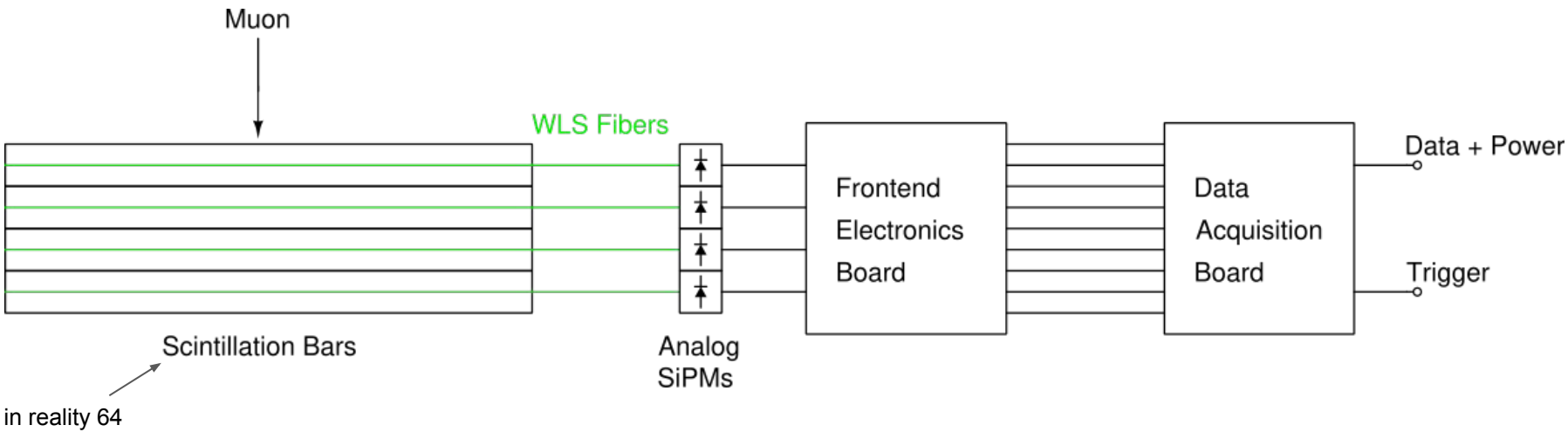

Current *AMIGA* Muon Detector

A. Aab *et al.*, "Muon counting using silicon photomultipliers in the AMIGA detector of the Pierre Auger observatory," *J. Inst.*, vol. 12, no. 03, pp. P03002–P03002, Mar. 2017, doi: 10.1088/1748-0221/12/03/P03002.
A. Aab *et al.*, "Design, upgrade and characterization of the silicon photomultiplier front-end for the AMIGA detector at the Pierre Auger Observatory," *J. Inst.*, vol. 16, no. 01, pp. P01026–P01026, Jan. 2021, doi: 10.1088/1748-0221/16/01/P01026.

Scintillator Based Muon Detection

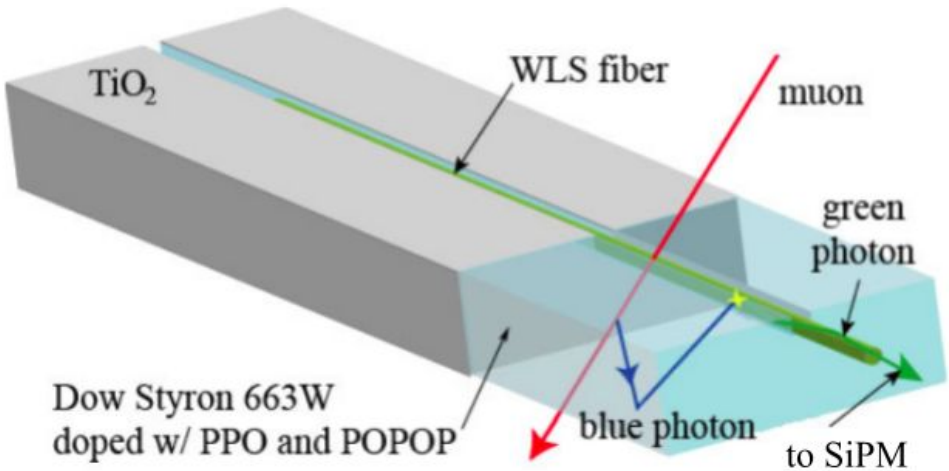

- Muon generates blue photons in scintillator
- Those photons are absorbed by Wavelength Shifting (WLS) Fiber
- SiPM detects green photons emitted by WLS Fiber

Picture adapted from: M. Platino et al., "AMIGA at the Auger Observatory: the scintillator module testing system," J. Inst., vol. 6, no. 06, pp. P06006–P06006, Jun. 2011, doi: 10.1088/1748-0221/6/06/P06006.

Internal Structure of a SiPM

- Analog SiPM: Array of microcells connected in parallel
- Each microcell contains a Single Photon Avalanche Diode (SPAD) connected to a quenching resistor
- SPAD is working in Geiger mode
  - When hit by a photon it generates a large avalanche current (it “fires”)
  - Avalanche current must be quenched to restore pre-hit conditions
- Output signal amplitude depends on how many SPADs fire

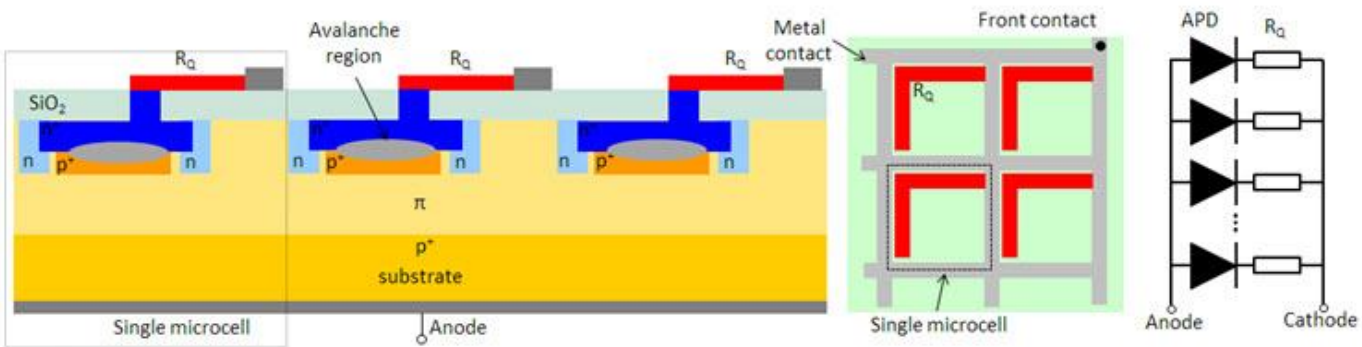

“What is an SiPM and how does it work? | Hamamatsu Photonics.” https://hub.hamamatsu.com/us/en/technical-notes/mppc-sipms/what-is-an-SiPM-and-how-does-it-work.html (accessed Nov. 04, 2022).

How does a SiPM Pulse generated by a muon look like?

Muon Telescope Test Setup

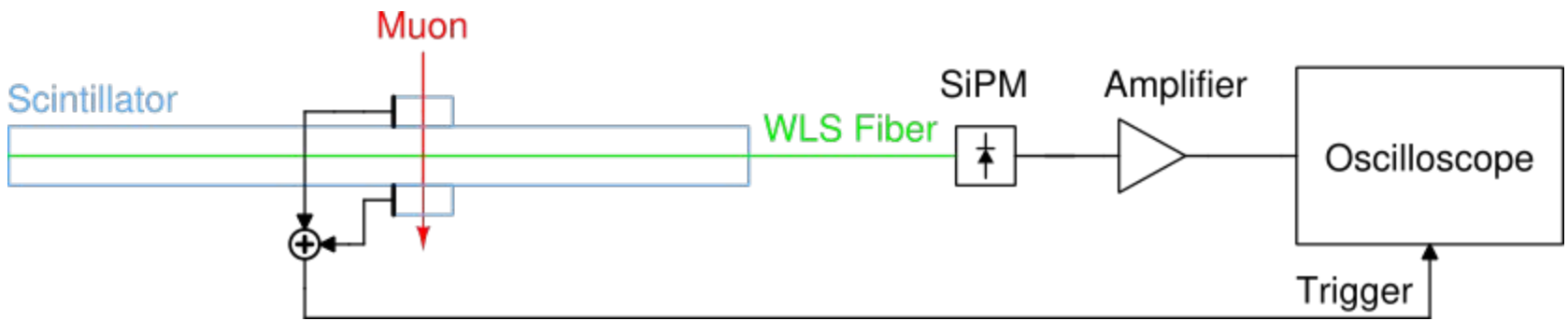

5000 triggered events are acquired for different positions

Thanks to Matias Hampel and Alan Fuster
for the introduction to the setup

Example of SiPM Pulse

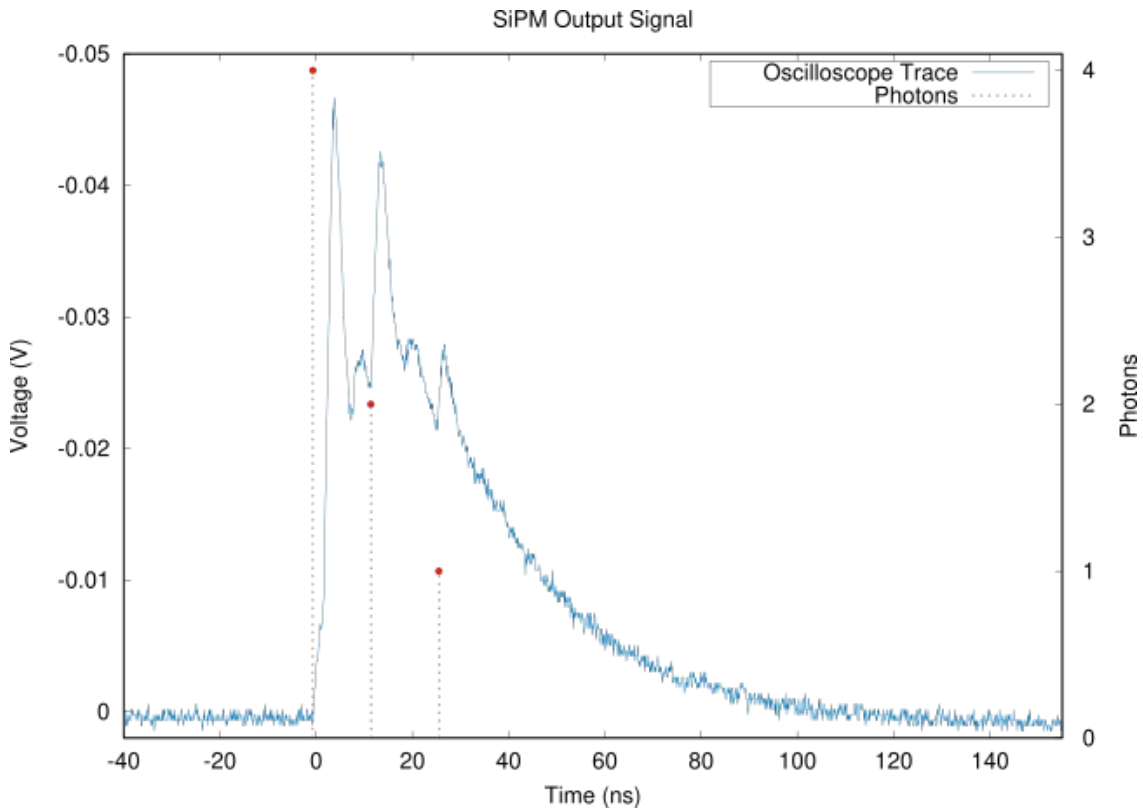

- Photons arrive at different times
- Calibration: 10 mV correspond to 1 P.E. (photon-electron)
- →can discriminate photons
- Work on automatic fitting of photon pulses still ongoing

Goal: measure distribution of arrival time of photons for different positions

Improving Detectors with Digital SiPMs

How to Improve the Detectors for ANDES?

- Current setup in AMIGA has very limited time resolution
  - → higher time resolution
    - → gives more information about photons generated by muon
    - → increases position resolution
- Scalable Detector to reduce size and increase flexibility
  - 1,2,4,..64 Fiber+SiPMs together

→Digital SiPM

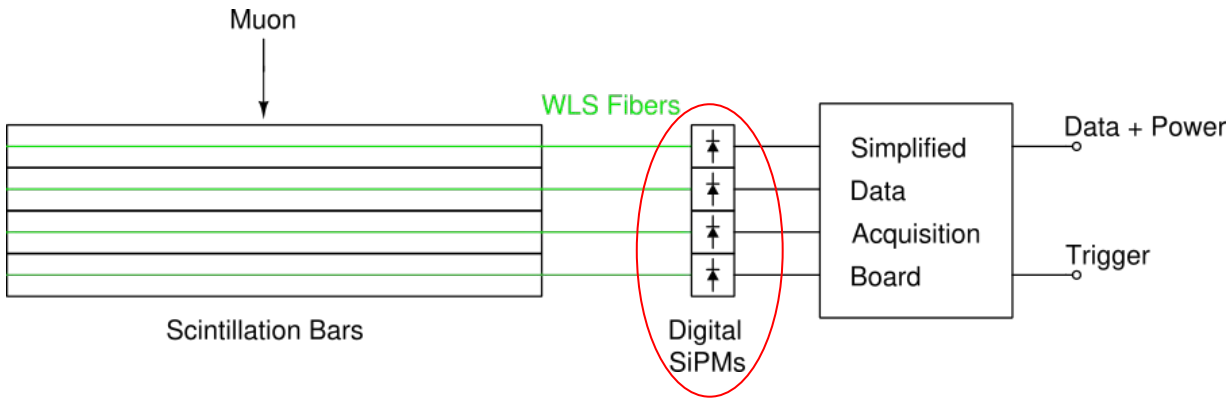

Muon Detector based on Digital SiPMs

What is a Digital SiPM - Analog vs. Digital SiPM

- SiPM is an array of Single Photon Avalanche Diodes (SPADs)
- Analog SiPM
  - All SPADs in parallel
  - Signal very small when only one SPAD fires
- Digital SiPM
  - Every SPAD has its own readout
  - Large Signal from firing SPAD
  - Noisy SPADs can be masked

→Development of ANDESPix in collaboration KIT-ITeDA-CAB

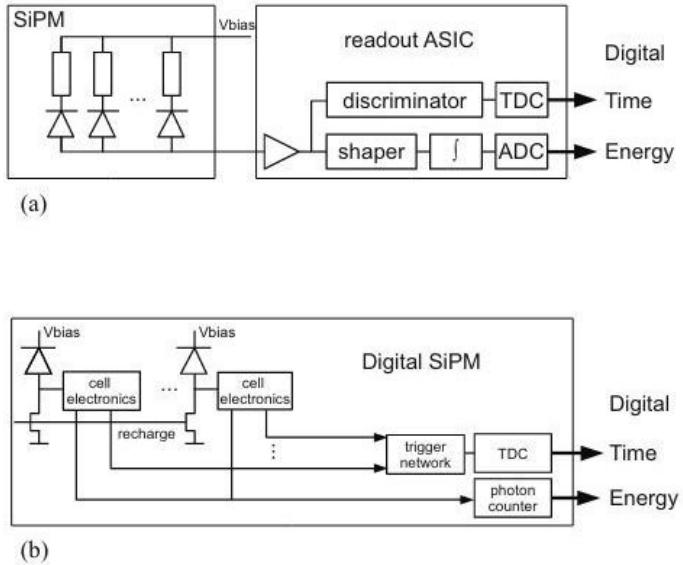

Analog (a) vs. Digital (b) SiPM readout

T. Frach, G. Prescher, C. Degenhardt, R. de Gruyter, A. Schmitz, and R. Ballizany, "The digital silicon photomultiplier — Principle of operation and intrinsic detector performance," in *2009 IEEE Nuclear Science Symposium Conference Record (NSS/MIC)*, Oct. 2009, pp. 1959–1965. doi: 10.1109/NSSMIC.2009.5402143.

Thanks to Fabricio Alcalde and José Lipovetzky from CAB for supporting us in the design

Two Ways to Realize a Digital SiPM

	Hybrid Detector	**Monolithic Detector**
	SiPM-Chip is (bump-)bonded to a readout ASIC	SPADs and readout electronics on one chip
+	● High fill factor ● Electronics can be placed below the SPAD ○ →small total chip area	● Cheap, easy and fast to fabricate ● Simple installation and handling
-	● Backside illumination or Through Silicon Vias (TSV) in SiPM ○ both are difficult to realize ● Complicated bump bonding	● Lower fill factor ● Larger periphery

Monolithic Approach: LFoundry 110 nm

- 110 nm CMOS Technology
- Contains SPADs with
  - Low dark count rate DCR
  - Relatively high photon detection efficiency (PDE) for green light
  - High time resolution (small jitter)

SPADs offered by FBK in LFoundry 110nm:

	Cell Type1	Cell Type2
size	22.2 µm - 27.2 µm	
BV	18.3 V	20.1 V
Median DCR@ 3V	0.15- 0.19 Hz/µm2	0.15- 0.21 Hz/µm2
PDE peak @3 V	19.8-30.8% 450 nm	16.2%-24.0% 450 nm
PDE#850 nm @3 V	3.2%	3.0%
jitter@831 nm	57.9 - 65 ps	76-80 ps

Giovanni Margutti, "2020 International SPAD Sensor Workshop (ISSW)," *International Image Sensor Society*, Sep. 30, 2020. https://imagesensors.org/2020-international-spad-sensor-workshop-issw/ (accessed Nov. 04, 2022).

SPAD Readout for Digital SiPM

- Adapted Readout from PicoPix1
- SPAD must be quenched after firing by resistor/transistor
- Comparator to discriminate signal (simple inverter possible)
- Hit-flag to count photons
- TDC to assign timestamp
- →each individual photon gets its own timestamp

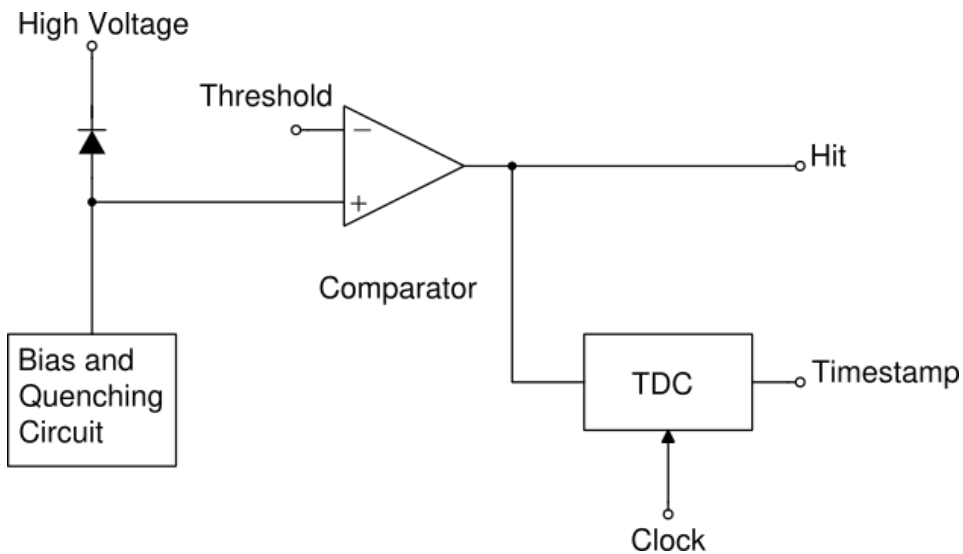

Conclusion

Conclusion

- Photons generated by muon in scintillator are spread in time
- → enhanced study of their time of arrival improves understanding of detector and incoming position of muon
- Digital SiPM is a very good approach to improve setup
- LFoundry offers a process with very good SPADs
- Submission of Digital SiPM planned in June next year

Bibliography

- ## ANDES Underground Laboratory

andeslab.org

X. Bertou, “Science in underground laboratories The ANDES Initiative,” p. 76.

X. Bertou, “The ANDES underground laboratory,” Eur. Phys. J. Plus, vol. 127, no. 9, p. 104, Sep. 2012, doi: 10.1140/epjp/i2012-12104-1.

X. Bertou, “The ANDES Deep Underground Laboratory,” Science Reviews - from the end of the world, vol. 1, no. 4, Art. no. 4, Sep. 2020, doi: 10.52712/sciencereviews.v1i4.24.

- ## AMIGA

A. Aab et al., “Design, upgrade and characterization of the silicon photomultiplier front-end for the AMIGA detector at the Pierre Auger Observatory,” J. Inst., vol. 16, no. 01, pp. P01026–P01026, Jan. 2021, doi: 10.1088/1748-0221/16/01/P01026.

A. Aab et al., “Muon counting using silicon photomultipliers in the AMIGA detector of the Pierre Auger observatory,” J. Inst., vol. 12, no.03, pp. P03002–P03002, Mar. 2017, doi: 10.1088/1748-0221/12/03/P03002.

Bibliography

- Scintillator Based Muon Detection

M. Platino et al., “AMIGA at the Auger Observatory: the scintillator module testing system,” J. Inst., vol. 6, no. 06, pp. P06006–P06006, Jun. 2011, doi: 10.1088/1748-0221/6/06/P06006.

- What is a SiPM?

“What is an SiPM and how does it work? | Hamamatsu Photonics.” https://hub.hamamatsu.com/us/en/technical-notes/mppc-sipms/what-is-an-SiPM-and-how-does-it-work.html (accessed Nov. 04, 2022).

- Digital SiPM

Giovanni Margutti, “2020 International SPAD Sensor Workshop (ISSW),” International Image Sensor Society, Sep. 30, 2020. https://imagesensors.org/2020-international-spad-sensor-workshop-issw/ (accessed Nov. 04, 2022).

T. Frach, G. Prescher, C. Degenhardt, R. de Gruyter, A. Schmitz, and R. Ballizany, “The digital silicon photomultiplier — Principle of operation and intrinsic detector performance,” in 2009 IEEE Nuclear Science Symposium Conference Record (NSS/MIC), Oct. 2009, pp. 1959–1965. doi: 10.1109/NSSMIC.2009.5402143.

Backup

Silicon Pixel Detector Technologies

Hybrid Design

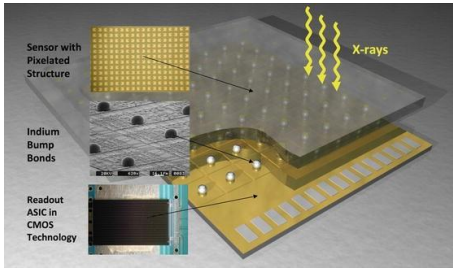

HPC Pixel Detector

C. Brönnimann and P. Trüb, “Hybrid Pixel Photon Counting X-Ray Detectors for Synchrotron Radiation,” Synchrotron Light Sources and Free-Electron Lasers, pp. 1–33, 2018, doi: 10.1007/978-3-319-04507-8_36-2.

- Sensor (bump-) bonded to frontend ASIC

Monolithic Design

Monolithic Active Pixel Sensor (MAPS)

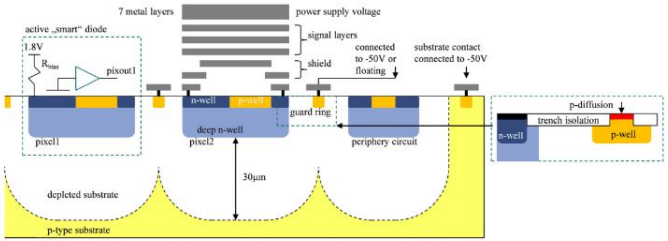

ATLASPix3 (HVMAPS)

I. Perić et al., “High-Voltage CMOS Active Pixel Sensor,” IEEE Journal of Solid-State Circuits, vol. 56, no. 8, pp. 2488–2502, Aug. 2021, doi: 10.1109/JSSC.2021.3061760.

- Readout electronics (partly) in pixel
- High fill factor
- Low material budget

Passive Sensors

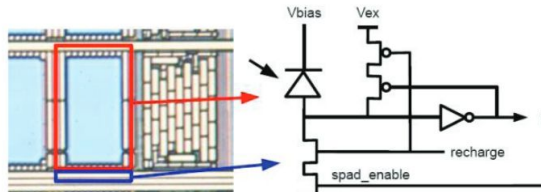

Philips Digital SiPM

Y. Haemisch, T. Frach, C. Degenhardt, and A. Thon, “Fully Digital Arrays of Silicon Photomultipliers (dSiPM) – a Scalable Alternative to Vacuum Photomultiplier Tubes (PMT),” Physics Procedia, vol. 37, pp. 1546–1560, Jan. 2012, doi: 10.1016/j.phpro.2012.03.749.

- Readout electronics outside pixel
- Reduced fill factor

Basics of Time Resolution

Time Jitter

$$\sigma_t = \frac{\sigma_n}{\frac{dV}{dt}\big|_{V_{Th}}} \approx \frac{t_r}{S/N}$$

- High time resolution requires
  - Fast rise time
  - High signal to noise ratio

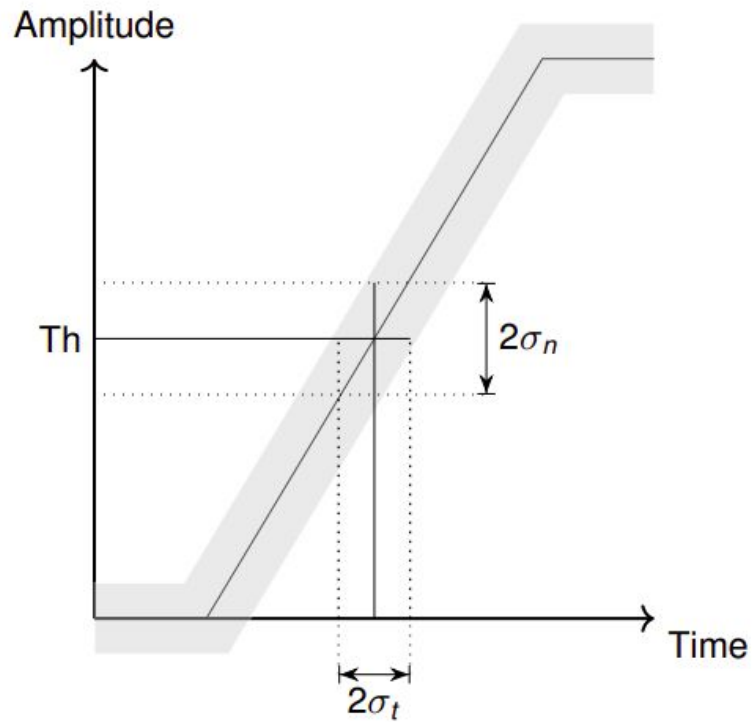

Threshold Crossing

H. Spieler, "Semiconductor Detector Systems," *Semiconductor Detector Systems*, pp. 1–512, Jan. 2007, doi: 10.1093/acprof:oso/9780198527848.001.0001.

Example of Comparator Output

- If possible: put threshold crossing at highest slope
- However: keep enough distance to noise floor (> 3 N)

→ Prevent generation of false hits

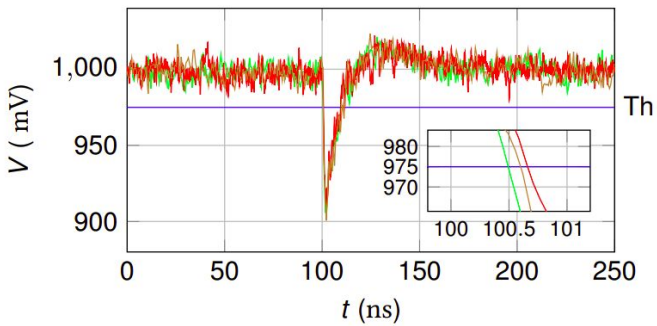

Amplifier Output and Threshold (Th)

Time to Digital Converter (TDC)

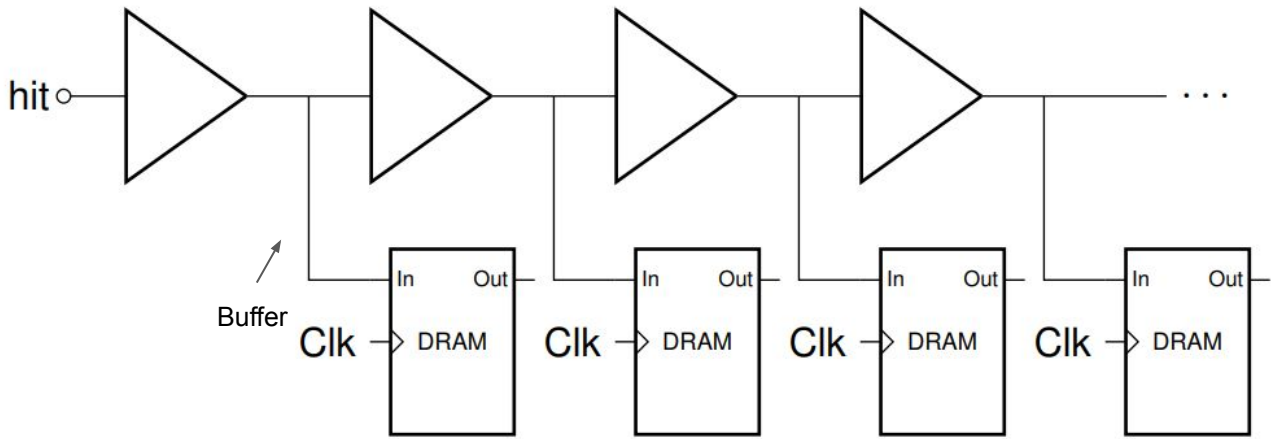

- Fine TDC: tapped delay line
  - Delay buffer output stored with rising edge of Clk
- Coarse TDC: timestamp counter to assign right clock pulse